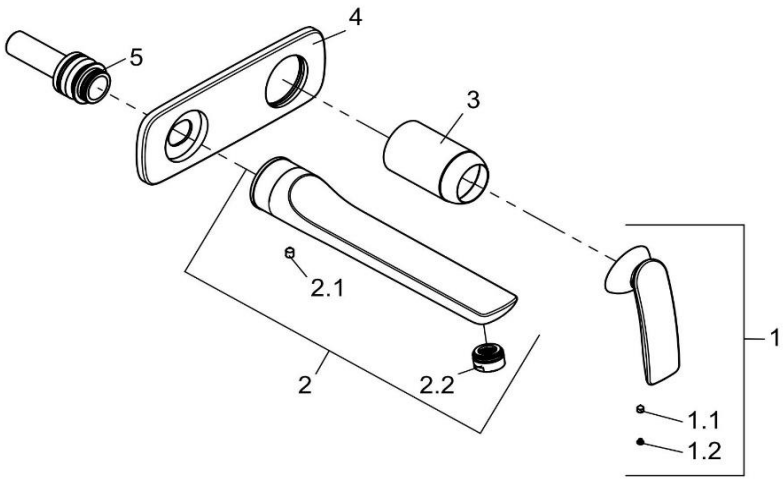

522470575		Waschtisch-Wandarmatur DN 15	wall mounted basin mixer DN 15
1	7506405-00	HEBEL BALANCE	LEVER BALANCE
1.1	92204601-00	GEWINDESTIFT	GRUB SCREW
1.2	7488700-00	STOPFEN	PLUG
2	7355205-00	AUSLAUF	SPOUT
2.1	91709235-00	GEWINDESTIFT	GRUB SCREW
2.2	7339005-00	STRAHLREGLER	AERATOR
3	92066705-00	ABDECKHÜLSE	COVER SLEEVE
4	7355305-00	ROSETTE	ESCUTCHEON
5	92504211-00	O - RING	O-RING