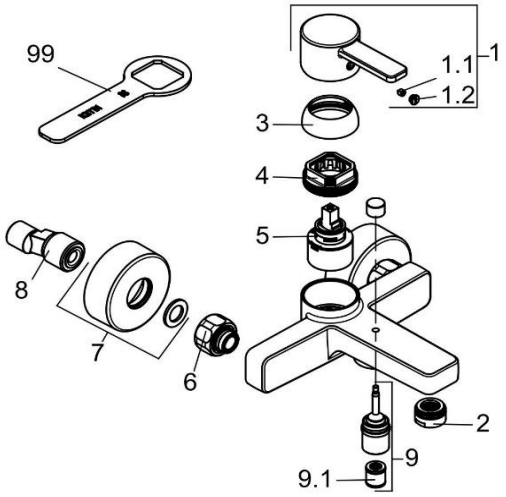


| 386700575 | | Wannenfüll-und Brausearmatur DN 15 | bath- and shower mixer DN 15 |
|---|---|---|---|
| 1 | 7466905-00 | HEBEL ZENTA | LEVER ZENTA |
| 1.1 | 92204601-00 | GEWINDESTIFT | GRUB SCREW |
| 1.2 | 93092100-00 | STOPFEN | PLUG |
| 2 | 7542505-00 | STRAHLREGLER | AERATOR |
| 3 | 93018605-00 | ABDECKKAPPE | COVER CAP |
| 4 | 82311500-00 | SPANNSCHRAUBE | FASTENING SCREW |
| 5 | 7560500-00 | STEUEREINHEIT | CERAMIC CARTRIDGE |
| 6 | 7533505-00 | WANDARMATURENANSCHLUSS | WALL CONNECTING NIPPLE |
| 7 | 7469805-00 | ROSETTE | ESCUTCHEON |
| 8 | 7655100-00 | S - ANSCHLUSS | S - CONNECTIONS |
| 9 | 7465905-00 | UMSTELLUNG | DIVERTER |
| 9.1 | 7504500-00 | RÜCKFLUSSVERHINDERER | BACK FLOW PREVENTER |
| 99 | 92907700-00 | SPANNSCHRAUBENSCHLÜSSEL | WRENCH FOR FASTENING SCREW |
| | | | |
| | | | |
| | | | |
| | | | |
| | | | |
| | | | |
| | | | |
| | | | |
| | | | |